A boolean network for studying the macrophages differentiation in SARS-CoV-2 infection

Ordaz-Arias Manuel A.[1], Balderas-Martínez Yalbi I.[2*], Martínez-Sanchez Mariana E.[2*]
1. Licenciatura en Ciencias Genomicas. Centro de Ciencias Genomicas. UNAM
2. Investigacion. Instituto Nacional de Enfermedades Respiratorias Ismael Cosio Villega
*Corresponding author: yalbibalderas@gmail.com, mar.esther23@gmail.com

Abstract

To study macrophages' role during the COVID-19 pandemic, we constructed a Boolean network of 58 interactions and 36 nodes representing cytokines, signaling pathways, and transcription factors. The network has 488 attractors classified into M1, M2a, M2b, and M2c cell types. The attractors reveal polarizations under actual biological conditions of all phenotypes that we can observe in vivo. Our goal is to use this boolean-network later and study macrophages' behavior during SARS-CoV-2 infection.

Macrophage Polarization

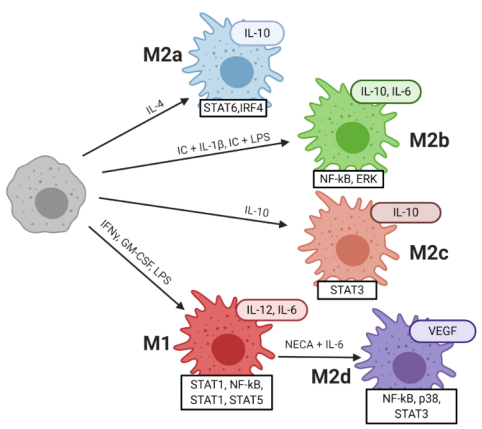

Macrophages are innate immune cells with remarkable plastic characteristics that can detect and respond to pathogens and diverse stimuli. Macrophage polarization is a process whereby macrophages mounts specifics characters to respond to a certain cytokine mileu. They differentiate into classical M1 macrophages with inflammatory properties and the alternatively activated M2 macrophages with anti-inflammatory properties, which are further sub-categorized into M2a, M2b, M2c, M2d phenotypes.

Macrophages Role in SARS-CoV-2 infection

In COVID 19 we know that there is a dysregulated immune response which is causing a state of hyperinflammation. This can dysregulate macrophage and generate diseases like Macrophage Activation Syndrome, that can arise to other complications such as Cytokine Storm and Acute respiratory distress syndrome. Also, It has been seen that there are important macrophage signaling pathways that are leading to this hyperactivation of inflammation.

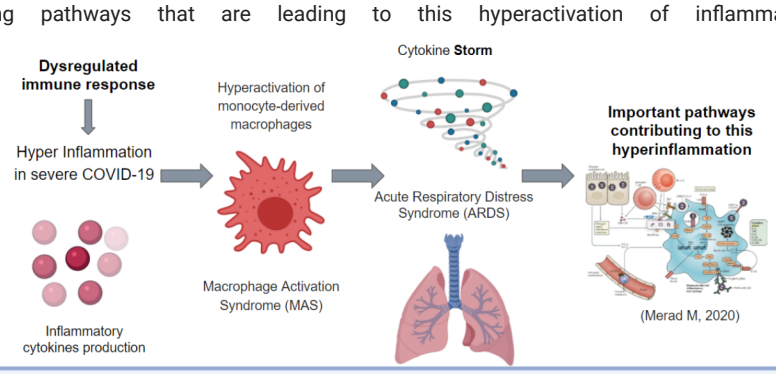

Constructing the Boolean Network Model for Studying the Macrophage Differentiation

We started using a pre-existing macrophage differentiation model from Palma and collaborators (Palma et al. 2018). Then, we curated each node looking for information that would support the interaction or deny it, later we search other interactions and nodes such as the SOCS proteins and the interleukin 6 pathway that would stabilize our network and give us the M2d phenotype. To do this, we reviewed 63 papers to generate 36 nodes that represent cytokines, signaling pathways and TFs, and 58 interactions among them.

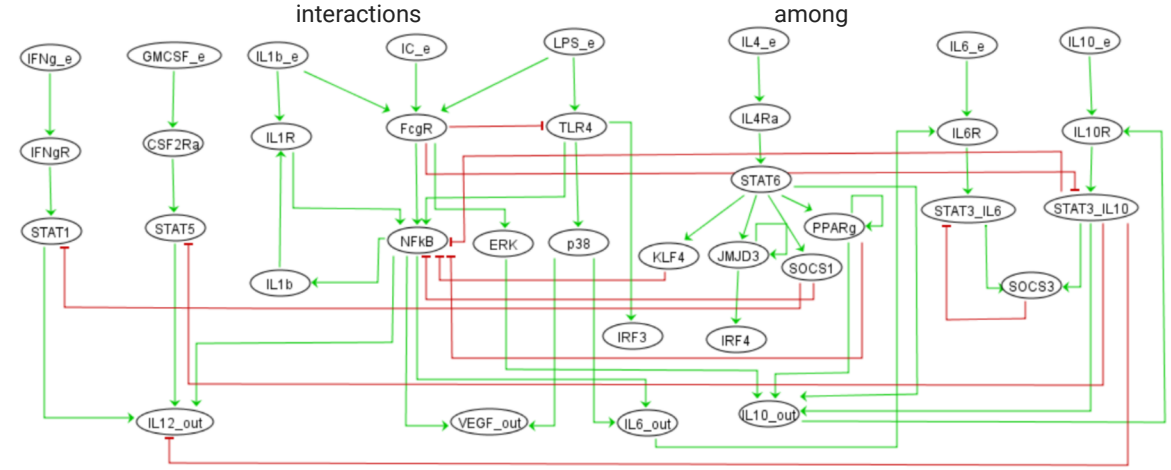

Attractors and Phenotypes

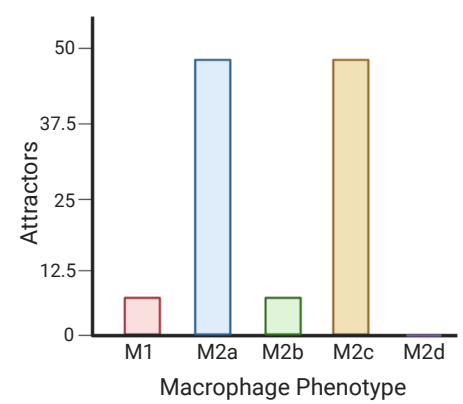

To study and generate the boolean network, we used GINSIM software and the BoolNet and BoolNetPerturb package in R. The network generated 488 attractors and with the help of Markers based on the signaling pathways and secretion profiles of each phenotype, we could classify the attractors into their specific phenotypes, the only attractor that was not obtained is that of the M2d phenotype

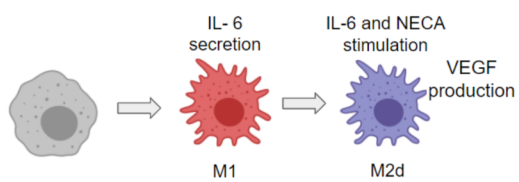

We need to finish modeling this indirect state change in the network and get the correct secretor profiles

Use the model in SARS-CoV-2 infection

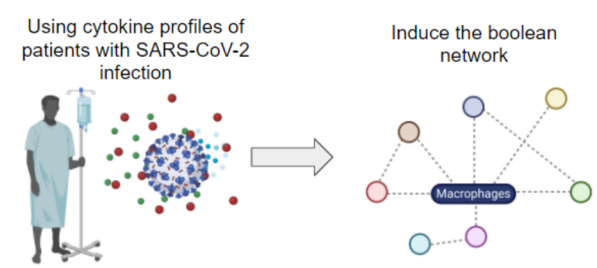

To use the model in the infection by SARS-CoV-2, we will have to generate the profiles of cytokines that are produced in the infection by SARS-CoV-2, and then we will have to induce the network with the stimulus that the profiles have, to finally characterize the important signaling pathways used by macrophages during infection, and this can help us with questions about how SARS-CoV-2 affects the host's immune system

References
1. Merad, M., & Martin, J. C. (2020). Pathological inflammation in patients with COVID-19: a key role for monocytes and macrophages. Nature reviews. Immunology, 20(6), 355–362. https://doi.org/10.1038/s41577-020-0331-4
2. Palma, A., Jarrah, A. S., Tieri, P., Cesareni, G., & Castiglione, F. (2018). Gene Regulatory Network Modeling of Macrophage Differentiation Corroborates the Continuum Hypothesis of Polarization States. Frontiers in physiology, 9, 1659. https://doi.org/10.3389/fphys.2018.01659
Created with BioRender.com

Mariana Esther Martinez acknowledges her postdoctoral CONACYT fellowship